LBNL-41942
CBS-379

To be presented at the Green Building Challenge '98 Conference, Vancouver, British Columbia, Canada, October 26-28, 1998, and to be published in the proceedings.

Documenting Performance Metrics in a Building Life-cycle Information System

Robert J. Hitchcock, Mary Ann Piette, Stephen E. Selkowitz
Building Technologies Department
Environmental Energy Technologies Division
Ernest Orlando Lawrence Berkeley National Laboratory
University of California
Berkeley, CA

August 1998

This work was supported by the U.S. Environmental Protection Agency, Atmospheric Pollution Prevention Division; and the Laboratory Directed Research and Development (LDRD) Funds of Lawrence Berkeley National Laboratory, under Contract No. DE-AC03-76SF00098.

Documenting Performance Metrics in a Building Life-cycle Information System

Robert J. Hitchcock, Mary Ann Piette, Stephen E. Selkowitz

Introduction

In order to produce a new generation of green buildings, it will be necessary to clearly identify their performance requirements, and to assure that these requirements are met. A long-term goal of our program is to provide building decision-makers with the information and tools needed to cost-effectively assure the desired performance of buildings, as specified by stakeholders, across the complete life cycle of a building project. A key element required in achieving this goal is a method for explicitly documenting the building performance objectives that are of importance to stakeholders. Such a method should clearly define each objective (e.g., cost, energy use, and comfort) and its desired level of performance. This information is intended to provide quantitative benchmarks useful in evaluating alternative design solutions, commissioning the newly constructed building, and tracking and maintaining the actual performance of the occupied building over time.

We refer to these quantitative benchmarks as performance metrics, and they are a principal element of information captured in the Building Life-cycle Information SyStem (BLISS) [Hitchcock, et al., 1997]. Metrics can be flexibly defined within the BLISS framework for a wide spectrum of objectives that building process participants wish to specify and track. In addition to performance metrics, BLISS contains a standardized data model that captures a detailed description of the building designed to achieve the specified objectives. This information is meant to be maintained and shared by building process participants across the complete life cycle of a building project. Participants will make use of the specific information within the overall data model that is relevant to the task at hand, such as design, commissioning, facility maintenance, and performance tracking.

An initial implementation of BLISS is based on the International Alliance for Interoperability's (IAI) Industry Foundation Classes (IFC), an evolving data model under development by a variety of architectural, engineering, and construction (AEC) industry firms and organizations [IAI, 1997]. Within BLISS, the IFC data model has been extended to include performance metrics and a structure for archiving changing versions of the building information over time. This paper defines performance metrics, discusses the manner in which BLISS is envisioned to support a variety of activities related to assuring the desired performance of a building across its life cycle, and describes a performance metric tracking tool, called Metracker, that is based on BLISS.

Performance Objectives and Metrics

A building project begins with a consideration of the various performance objectives of interest to building stakeholders. While primary attention is generally given to space requirements and construction costs, a wide spectrum of objectives may be at least informally considered at this stage, including: life-cycle economics; energy-efficiency; environmental impact; occupant health, comfort and productivity; and building functionality, adaptability, durability, and sustainability.

The process of identifying the objectives for a given building project is often referred to as programming. The outcome of programming is most commonly recorded in text that becomes part of design and construction documentation. This documentation may be frequently referenced during design, and occasionally referenced during construction, but then most often collects dust from that time forward.

Performance metrics are designed to explicitly represent project objectives, using quantitative criteria, in a dynamic, structured format that provides value across the life cycle of a building project. One or more metrics may be defined for any given performance objective that building process participants (e.g., owners, designers, operators, occupants) wish to specify and track. A guiding principle in defining a performance metric is to identify a critical variable that measures, reflects, or significantly influences a particular performance objective. To be useful across the building project life cycle, each metric must also be capable of being either predicted or measured at various stages of the project so that the achievement of each objective can be evaluated.

In most instances, a high-level performance objective will need to be delineated by multiple metrics that influence its overall satisfaction. This delineation can be organized hierarchically as illustrated in Figure 1 for a Life-Cycle Cost performance objective.

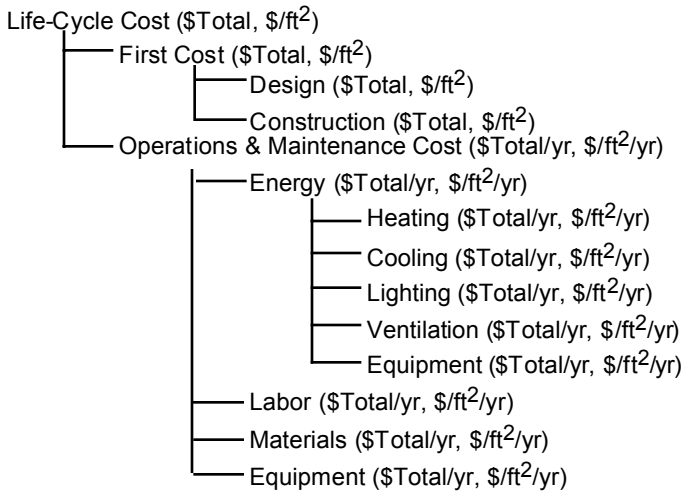

Figure 1. Performance Metric Breakdown for Life-Cycle Cost.

While life-cycle cost is a relatively straightforward performance objective to delineate, others, such as energy-efficiency, may be more difficult. The hierarchy in Figure 2 shows one possible subset of performance metrics that could be used to specify, track, and maintain energy-efficiency in a building. Note that each performance metric is not necessarily a simple arithmetic sum of its constituent metrics as was the case for life-cycle cost. The hierarchical organization logically groups metrics that are important to track because of their impact on their parent metric. For example, the hierarchy below indicates that one component of whole-building energy performance is the cooling system energy use intensity (Cooling EUI) which in turn is influenced by chiller and cooling tower efficiencies and building cooling load, among other possible elements.

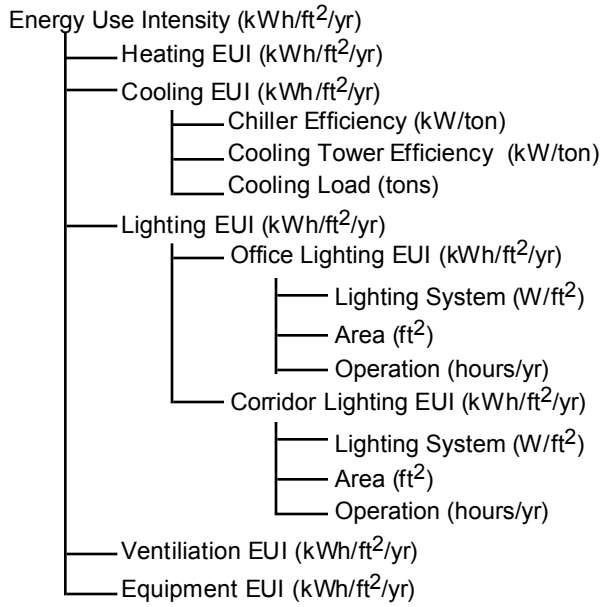

Figure 2. Performance Metric Breakdown for Energy Use Intensity.

Performance metrics come in a variety of forms for which there is presently little standardization. For example, chiller efficiency can be specified in numerous ways including: a single value parameter (e.g., coefficient of performance (COP) or integrated part load value (IPLV)), multiple data points representing a two-dimensional part load curve for specific operating conditions or a three-dimensional part load surface across the full operating regime, or a mathematical curve or surface function representing these same data. Moreover, the preferred method for documenting a performance metric may change over the life cycle of a project. Following the chiller efficiency example, pre-design planning might specify a desired chiller IPLV. Detailed design simulation might employ a mathematical representation (e.g., a curve fit) of the performance of the selected chiller, based on manufacturer specifications. Commissioning and O&M measurements might subsequently collect multiple time series data points during the chiller's actual operation. The specification of a performance metric must therefore be flexible enough to accommodate this variety of forms.

Our data definition for a performance metric includes the following parameters: name, specifier, date of specification, description, benchmark value and source, and assessment value(s) and source. The metric *name* is a text identifier which we intend in the future to supplement with a standardized code for a predefined set of performance metrics drawn from work in this area by GBC, ASHRAE, IES, and others [Larsson, 1993; ASHRAE/IES, 1989], as well as discussions with a variety of industry participants. The *specifier* and *date of specification* document the building process participant concerned with each building performance objective. The *benchmark value* documents the intended level of performance. The *benchmark source* archives the origin of the benchmark value (e.g., code, standard, simulation, manufacturer, EMCS). One or more *assessment values* record the performance of a building design, or an operating building, over time. The *assessment source* indicates the means by which a performance level has been assessed (e.g., simulation, measurement, estimation).

Sets of both benchmark and assessment values are archived for each performance metric over the life cycle of a building project. There may be an initial benchmark value established in pre-design planning, updated benchmark values and predicted assessment values determined during design, short-term measurements from commissioning, and long-term monitored values. At any given point in time within the life cycle there should be only one specified benchmark value used to evaluate current performance with regard to each metric.

There are numerous uses and potential benefits of explicit documentation of building performance metrics. For example, project planners could more clearly document their desired performance objectives during initial project planning. Multi-criteria evaluation of proposed solutions during design could be better supported, and the resulting decisions could be better documented for sharing amongst design team members. Multi-criteria assessment of design changes during construction and operations and maintenance (O&M) could be improved. A more comprehensive commissioning process could be cost-effectively supported by ready access to clearly specified performance targets. O&M evaluation of the day-to-day performance of a building, and the early detection and diagnoses of maintenance problems, could be enhanced through performance benchmarking. Performance contracting and measurement and verification could be better supported by performance data documented in a structured manner. Formal post-occupancy evaluation of the building could be more easily performed to provide feedback on the success or failure of design decisions, both for continuous performance tracking of the occupied building, and for the future design of similar buildings. Concise and structured documentation for building performance labeling could also be provided.

Building Life-cycle Information System

One of the challenges in the development and use of tools to archive performance metrics is that the metrics cannot stand on their own. They are linked, for example, to design assumptions or operating conditions that generate the specified, predicted or measured performance that is to be evaluated against a benchmark. Thus, the concept in our Building Life-cycle Information SyStem (BLISS) is to ensure that there is a model of the building that can be used to predict design performance through the use of simulation tools. BLISS is intended to provide a complete and coherent representation of both design intent and the basis of design. *Design intent* is captured in the hierarchical organization of performance metrics. The *basis of design* is captured in the data model that contains all details of the building such as walls, windows, spaces, HVAC and lighting equipment and modes of operation. The data model thus documents the design decisions that have been made in the attempt to achieve the stated performance objectives. During design, the data from this model can be used as input to various simulation tools to predict the performance of the current design for evaluation against the desired performance. When a specific design is approved, and constructed as documented, the output from these simulation tools become the benchmarks against which to evaluate the measured performance of the occupied building. Modifications to the building design due to construction changes, or to the building operation due to occupancy or use changes, must be consistently documented in the building data model to provide as-built information. New simulation of the modified building can then provide updated benchmark values for the related performance metrics. In this manner consistent up-to-date documentation of both design intent and the basis of design is maintained throughout the life cycle of the building.

Figure 3 outlines a possible scenario for the use of performance metrics and a building life-cycle information system. The scenario begins in the programming phase (Step 1), where a set of performance metrics are selected and recorded in the BLISS database to represent building performance objectives. Computer aided design tools are used for the architectural design, and the resulting data are used as input to an energy simulation tool. Results from the design simulations are summarized in an updated set of performance metrics, which are compared with those established during the programming stage. In Step 2, the simulation results are used to establish a set of benchmark data sets for use in commissioning, and an automated tool is used to generate a detailed commissioning plan including test procedures. Changes that occur as the building is constructed are reflected in the calibrated simulation model, which can be used to evaluate the energy implications of such changes. As installation of each building system is completed, the commissioning tests are conducted to determine if the design intent was met (Step 3). Also at this stage, in-situ test results are used to re-calibrate simulation models and update the appropriate performance metrics.

In Step 4 the EMCS is used to continuously monitor the building and provide diagnostics with real-time simulation that checks actual operation against current performance benchmarks. These data are also used in a Facility Maintenance Management System (Step 5) which dispatches and tracks maintenance actions. One benefit of such integrated information systems is that one can readily identify the energy impact of O&M actions. For example, when the chillers are cleaned, the efficiency is improved and the new energy performance readily measured. O&M can therefore be optimized. The system is also linked to a retrofit simulation tool that allows the facility manager to explore the energy savings from possible major or minor system changes (Step 6). Each step involves the generation of metrics, which are archived and accessed in the common database format. The facility manager has a clear record of the design, as-built, and as-operated equipment, along with the total energy and economic performance of the building.

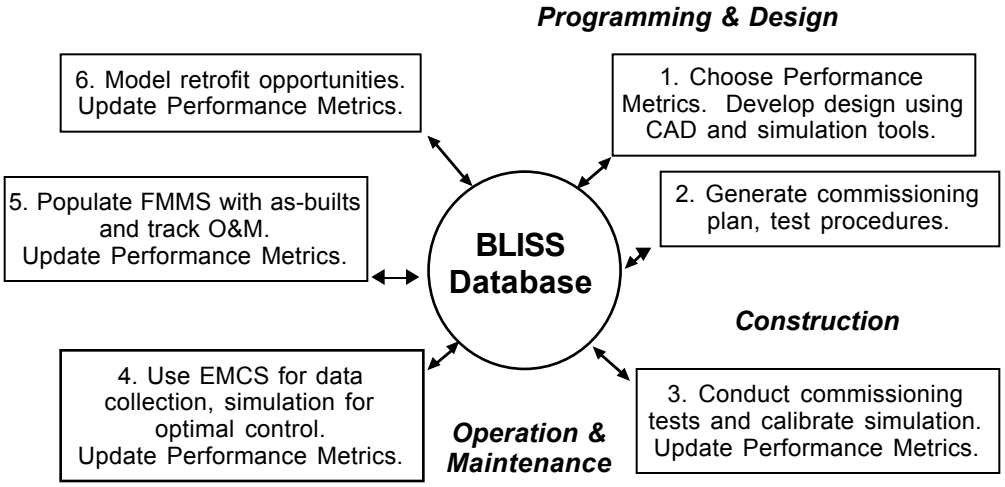

Figure 3. Use of Performance Metrics through the Building Life Cycle.

Performance Metric Tracking Prototype

We are developing a prototype implementation of a performance metric tracking tool, called Metracker, using the BLISS concepts described above. Metracker consists of a standardized data model and data exchange mechanism, and a user interface.

The Metracker prototype is built upon the International Alliance for Interoperability's (IAI) Industry Foundation Classes Release 1.50 (IFC1.5) data model extended with our definition of building performance metrics. The performance metric extensions to the IFC1.5 data model conform to IAI prescribed methods, enabling other IFC-compliant tools to exchange data with the prototype. The data exchange mechanism uses the IFC method of writing and reading STEP Express files, an international standard for the exchange of product data. We are working to incorporate the performance metric data classes in future releases of the IFC. In the meantime, only those tools that are cognizant of the performance metric extensions will be able to interpret these data. However, any IFC-compliant tool will be able to read and pass on the data intact to other tools.

The user interface for Metracker focuses attention on the specification, tracking, and visualization of performance metrics. This is accomplished through a data browser that displays the organization and details of a BLISS archive, and graphical visualization of performance metric data comparing intended and actual performance across the building life cycle.

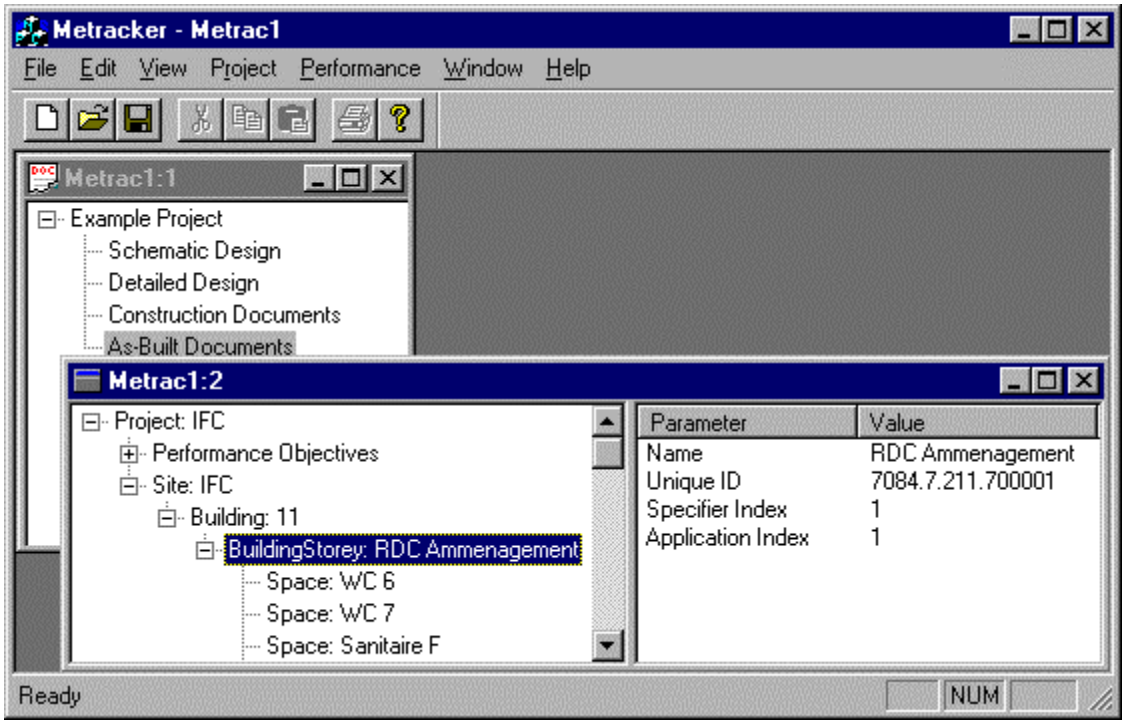

Figure 4. Metracker Data Browser.

Figure 4 shows an example of the Metracker data browser interface. The smaller window in the upper left lists multiple building versions that have been archived in a BLISS project named Example Project. The left pane of the lower window displays a hierarchical tree of the various objects (e.g., Site, Building, Building Story, and Space) archived in the selected building version

(As-Built Documents as shown here). Performance Objectives for the building version are also displayed in this hierarchy. The right pane of the lower window displays parameters of the selected object and their values.

The Metracker tool allows the user to either create a new IFC STEP Express file or open an existing file created by another IFC-compliant tool. The file is then associated with a user-specified building version within the overall project (e.g., Schematic Design, Detailed Design, etc.), and any existing objects within the file are displayed in the hierarchy. Performance Objectives and Metrics for the building version can be viewed and modified within the browser interface. Performance Metric data appear here in a flexible tabular format that will vary depending on the form of the entered data (e.g., scalar value, time series vector, x-y pair series, frequency distribution, etc.). Modifications to the performance specifications are archived by writing them to the IFC file.

Figure 5 shows an example of the performance metric data visualization interface under development. This example shows the desired target profile for whole building electric power, an acceptable tolerance for deviation from the target, and actual monitored power for a specific time period. This interface is designed to display a comparison between a specified benchmark and a selected assessment value for a given metric. The type of graph displayed will vary depending on the form of the metric data.

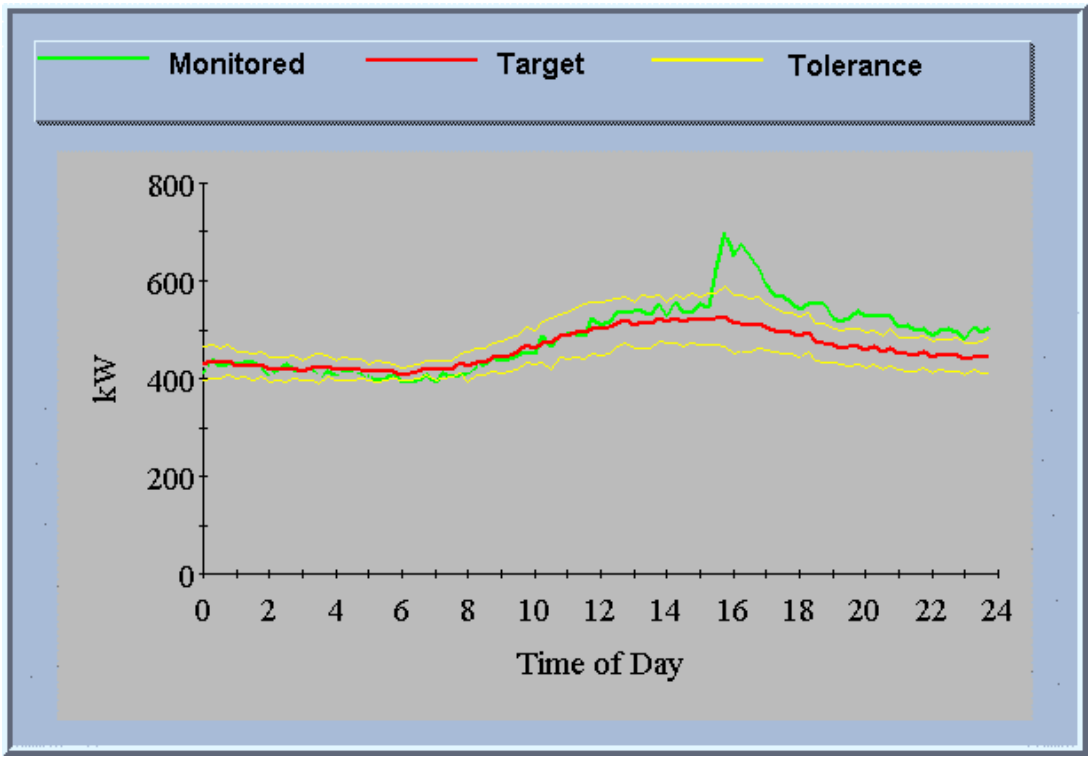

Figure 5. Example Performance Metric Data Visualization.

Metracker is still under development and in-house testing. We plan to field test the prototype within the next year and enhance the tool through the lessons learned. As previously stated, we are also working within the framework of the IAI to incorporate performance metric data classes in future releases of the IFC. By making this type of data broadly available to a variety of building industry software tools and end-users, we hope to continue toward our goal of a new generation of green buildings that perform as intended by design.

Acknowledgments

This work was supported by the U.S. Environmental Protection Agency, Atmospheric Pollution Prevention Division; and the Laboratory Directed Research and Development (LDRD) Funds of Lawrence Berkeley National Laboratory, under Contract No. DE-AC03-76SF00098.

References

ASHRAE/IES, 1989. " Standard 90.1-1989: Energy Efficient Design of New Buildings Except Low Rise Residential Buildings," American Society of Heating, Refrigeration, and Air-Conditioning Engineers, Atlanta, GA, (cosponsored by Illuminating Engineering Society, New York, NY), 1989.

Hitchcock, R, Selkowitz, S., Piette, M.A., Papamichael, K., and F. Olken, 1997. "Building Performance Assurance Through Improved Life-Cycle Information Management and Interoperable Computer Tools," Proceedings of the Fifth National Conference on Building Commissioning, April 28-30, 1997, Long Beach, CA.

IAI. International Alliance for Interoperability 1997. http://iaiweb.lbl.gov/

Larsson N. (Editor), 1993. "C-2000 Program Requirements," CANMET, Natural Resources Canada, October 1993.